A Better "Allband Transmit" Modification for the Drake TR-7

The problem with the "official" Drake-published modification for allband transmit with the TR7 is that it disables transmit inhibit signal from the **Digital Control** board. This is the commonly used mod to cut the trace between pins 11 of rows two and three on the parent board.[1] This signal might be desired in case an **AUX-7** board is present and RX only ranges such as VLF or 1.5-2.0 MHz were desired in AUX slots.

The allband mod also cannot be done the "official" way if the GW4ALG "**TX operation at 'Power On'**" mod[2] is desired. This mod eliminates a momentary activation of the T/R relay under certain conditions when power is turned on. This is a good idea in general but especially so if the operator has equipment such as satellite downconverters, transverters, or the like in line that can be damaged by unexpected application of transmit power. This modification requires the transmit inhibit signal from the **Digital Control** board to be functioning. A normally unused input on the **Digital Control** board called **Out of Lock (O.O.L)** is used for the GW4ALG "**TX operation at 'Power On'**" mod.

There must be a better way. The alternative allband transmit mod described by GW4ALG[3] preserves the transmit inhibit signal but does not allow transmit in the 2.5 or 5.0 MHz bands. Not quite "allband". I decided to try to find the best of both worlds. It turned out that it wasn't very difficult. All of the action happens in U208 on the **Digital Control** PCB as described on page 2-6 of the TR-7 Service Manual:

In the NORM mode, pin 14 of U209 will be low if pin 1 of U208 is low, which will be true if all four inputs of the four input NAND gate are high in accordance with the following table:

U208 PIN NO.	CONDITION FOR HIGH STATE
2	Not on 2.5 or 5.0 MHz bands
3	Legitimate Amateur Band (from DR-7)
4	Normal Mode Selected
5	Synthesizer Locked

If all conditions in the above table are satisfied, the transmitter will operate in the NORM mode.

The Synthesizer Locked condition will always be valid here because the **O.O.L.** signal from the VCO is routed directly to the PTT relay activation circuit on the **Low Pass Filter** module and there is no connection to the **Digital Control** board.

Two signals must be disabled, **"H.B." (Legitimate Amateur band)** and **Not 2.5 or 5.0**. Two cuts are required on the digital control board (see photo below). The first cut is to an insulated jumper wire that lies next to R221 on the digital control board. It is the only insulated jumper on the board. This has the same effect as unsoldering the collector of Q9001 on the DR7 board, as described by GW4ALG #15[3]. This disables the **H.B.** signal and fools the TR7 into thinking that (almost) every band is a ham band. The other cut must be done to a circuit trace connecting two

vias on the top side of the digital control board. This trace is located between U209 and R221, and is not connected to anything on the top (component) side of the board. Cutting this trace disables the **Not 2.5 or 5.0** signal from the band decode logic via U209-1. Transmission is now possible in the 2.5 and 5.0 MHz bands, and we now have complete allband transmit from 1.5-30 MHz. ***After these two cuts are made, the pin 11 cut on the bottom of the parent board <u>must</u> be reversed if it has been implemented.***

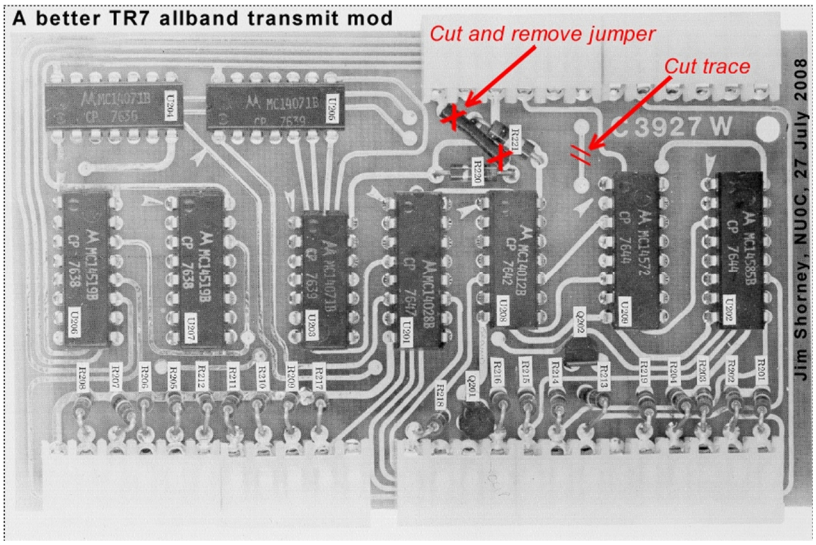

This modification refers to the Version 1 (early) **Digital Control** PCB. The late version **Digital Control** PCB uses a PROM to replace some of the ICs in the band decoding logic. The **O.O.L**. input is not included in the late version board as it was never used in production radios. A version of the GW4ALG "**TX operation at 'Power On'**" mod could possibly be connected to Pin 11 of the **Transmit Exciter** board with some adjustment of component values.

Remember to observe ESD handling precautions when working with the TR7. These parts are sensitive to static damage. Use a grounded soldering iron. As usual, standard disclaimers apply; this information is accurate to the best of my knowledge, but I'm not responsible if you break it.

Caution: transmission outside the allocated Amateur band frequencies will require a license other than an amateur radio operator license, and may also require an FCC certified transmitter. The TR7/TR7A is not an FCC certified transmitter.

PSA copied from the Drakelist web site[4].

REFERENCES

1. www.zerobeat.net/drakelist/drakemod/tr7mod.html
2. http://www.alg.myzen.co.uk/radio/tr7/mods.htm#7
3. http://www.alg.myzen.co.uk/radio/tr7/mods.htm#15
4. http://www.zerobeat.net/drakelist/

©2013, 2022 Jim Shorney, NU0C All Rights Reserved